Lifting Solutions Group
Axel Johnson International

Gebuwin grue portative SD 125-250-500

Informations du produit



The Swivel Davit is a very user-friendly standing crane. Lightweight and portable. The integrated winch and cable provide an ergonomic and modern look. Within 5 seconds this davit is ready for use.

Specifications:

- robust and safe lifting davit crane
- integrated winch and cable in a modern design
- easy to transport
- load pressure brake with double ratchet system for safe stable hold of the load in any position
- possible to rotate 360° due to the use of ball bearings
- adjustable crank
- 1 layer of paint

Optional:

- zinc-plated finish (6 - 8 micron) (EV)
- stainless steel grade SAE 316 (SST316)
- ATEX certified (EX)

Accessories:

- floor, wall and in-cement floor sockets
- carry bag and rain protection cover

... *En savoir plus*

Marquage: Selon la norme, Marqué CE
Norme: EN 13157

Coefficient de sécurité: 4:1

Mennens Belgium
sales@mennensbelgium.be
+32 (0)3 253 23 23

© Novembre 2026 - Tous droits réservés

MENNENS | Lifting Solutions Group
Axel Johnson International

Gebuwin grue portative SD 125-250-500

Dessin technique

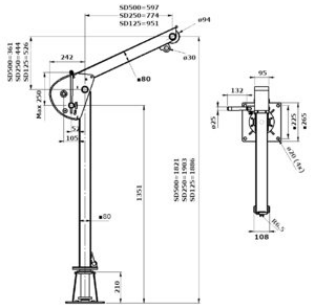

Données techniques

Réf.	Code	CMU tonne(s)	Capacité couche supérieure kg	Capacité câble couche supérieure m	Dia. câble mm	Portée max. mm	Poids (kg)
601177001890	SD125	0,125	125	18	4	951 mm	30
601177001870	SD250	0,25	250	18	4	774 mm	30
601177001850	SD500	0,5	500	13	5	597 mm	30

Mennens Belgium
sales@mennensbelgium.be
+32 (0)3 253 23 23

© Novembre 2026 - Tous droits réservés