Overhaul Ball Swivel Eye-Eye

Product information

General:
- Ball swivel with roller thrust bearing, grease lubricated.
- Ball swivel for higher WLL and of higher weights available on request.
- Hole can be made larger on request.
- On request, swivels can be made suitable for subsea use.
- SF: 4:1

Safety factor: 4:1

Part Code	WLL	Type	A mm	B mm	Q mm	R mm	T mm	TL mm	Weight kg
10.9956002000333	3.2	eye - eye	145	145	27	30	22	300	20
10.9956002000533	5	eye - eye	145	145	32	35	28	320	20
10.9956004000533	5	eye - eye	170	190	32	35	28	365	40
10.9956004000833	8	eye - eye	170	190	37	45	35	405	40
10.9956004501033	10	eye - eye	170	190	43	50	40	435	45
10.9956004501333	12.5	eye - eye	170	190	52	60	45	475	45
10.9956005001633	16	eye - eye	170	190	59	70	50	525	50
10.9956010502033	20	eye - eye	250	265	65	75	60	630	105
10.9956011002533	25	eye - eye	250	265	72	80	70	660	110
10.9956012503533	35	eye - eye	250	265	79	90	70	685	125
10.9956014005533	55	eye - eye	250	265	92	105	80	760	140
10.9956020007033	70	eye - eye	300	330	98	120	90	885	200
10.9956022508533	85	eye - eye	300	330	111	135	100	965	225
10.9956050012033	120	eye - eye	380	430	100	125	130	1,020	500
10.9956060015033	150	eye - eye	400	450	115	140	150	1,110	600
10.9956080020033	200	eye - eye	460	480	140	170	160	1,265	800
10.9956100025033	250	eye - eye	500	600	150	185	180	1,455	1,000
10.9956150030033	300	eye - eye	580	670	160	200	190	1,590	1,500
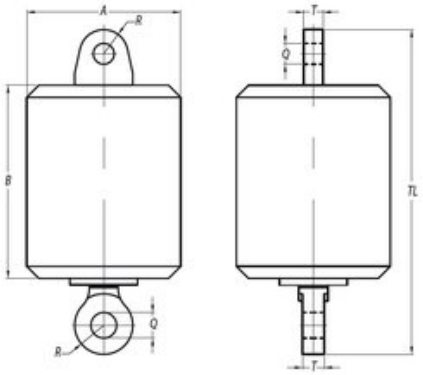
Blueprint