MENNENS | Lifting Solutions Group
Axel Johnson International

Single Sheave Crane Blocks

Product information



General:
- Standard fitted with becket, cylindrical roller bearing and reeving guide.
- Standard fitted with Crosby type of swivel only hook (319AN style), including safety latch and split pin.
- Standard painted yellow (no striping).
- This crane block may be used with 2 lines only as well.
- Sheaves may be adjustud for other wire rope diameters.
- Becket suitable for connecting Open Wedge Socket for indicated wire rope.
- Becket can not be adjusted.

... *Read more*

Mennens Belgium
sales@mennensbelgium.be
+32 (0)3 253 23 23

© November 2026 - All Rights Reserved

MENNENS | Lifting Solutions Group
Axel Johnson International

Single Sheave Crane Blocks

Blueprint

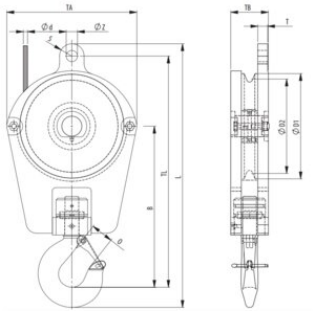

Technical data

Part code	WLL ton	Rope Ø mm	Sheave dia. mm	øD1 mm	øD2 mm	B mm	O mm	S mm	TA mm	TB mm	TLmm mm	T mm	øZ mm	Weight kg
6097HB2101115E	5	11	250/210	250	210	348	34	30	320	103	523	20	27	41
6097HB2201315E	5	13	260/221	260	221	353	34	30	353	109	525	22	27	67
6097HB2201418E	8	14	260/218	260	218	390	43	35	330	121	571	28	32	80
6097HB2551318E	8	13	300/255	300	255	426	43	30	370	101	621	22	27	89
6097HB2551618E	8	16	300/252	300	252	420	43	35	370	111	621	28	32	94
6097HB25516110E	10	16	300/252	300	252	459	52	35	370	127	659	28	32	91
6097HB22014110E	10	14	260/218	260	218	429	52	35	330	137	609	28	32	93
6097HB30516110E	10	16	350/305	350	305	499	52	35	435	107	739	28	33	113
6097HB34518112E	12	18	400/345	400	345	557	57	45	500	125	832	35	37	162
6097HB39020116E	16	20	450/390	450	390	592	57	50	550	131	917	35	43	206
6097HB43022120E	20	22	500/430	500	430	592	76	50	600	148	1,032	40	43	284

Mennens Belgium
sales@mennensbelgium.be
+32 (0)3 253 23 23

© November 2026 - All Rights Reserved