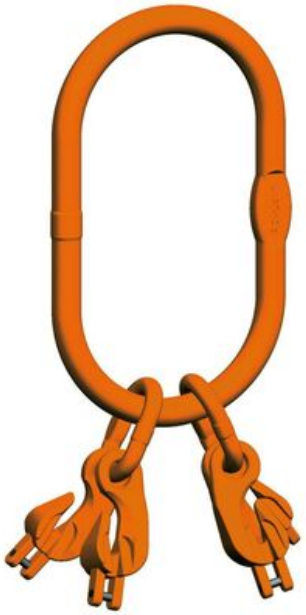

# Oversize Clevis Master Set Pewag LXKW

## Product information

This high-grade clevis master set was designed for the creation of IV-leg chain slings in the assembled system. The benefits of this system are obvious: the chain can simply be mounted directly in the captive coupling of the shortening element, thereby eliminating the need for an additional connecting link.

The hook functions both as a connecting link and a shortening element and the master link is suitable for crane hooks up to no. 25 according to DIN 15401 and up to no. 32 according to DIN 15402.

Because of its large master ring, it is frequently used on mobile cranes that must withstand multiple loads.

**Material:** High duty grade 10.
**Marking:** According to standard, CE-marked, Pewag or PW, winner or 10, H16, batch code and type.
**Temperature range:** -40ºC up to +380°C.
**Finish:** Orange powder coated.
**Standard:** EN 818-4

**Safety factor:** 4:1
**Grade:** 10

| Part Code | Code | WLL ton | Use for hook DIN 15401 Nr | Double hook DIN 15402 no. | d mm | e mm | t mm | w mm | Weight kg |
|---|---|---|---|---|---|---|---|---|---|
| 11.0287895 | LXKW 4-6 | 3 | 25 | 32 | 23 | 478 | 340 | 180 | 4.38 |
| 11.0287896 | LXKW 4-8 | 5.3 | 25 | 32 | 27 | 532 | 340 | 180 | 7.71 |
| 11.0287897 | LXKW 4-10 | 8 | 25 | 32 | 33 | 584 | 340 | 180 | 12.88 |
| 11.0287898 | LXKW 4-13 | 14 | 25 | 32 | 40 | 659 | 340 | 180 | 24.37 |
| 11.0287899 | LXKW 4-16 | 21.2 | 25 | 32 | 40 | 713 | 340 | 180 | 34.53 |
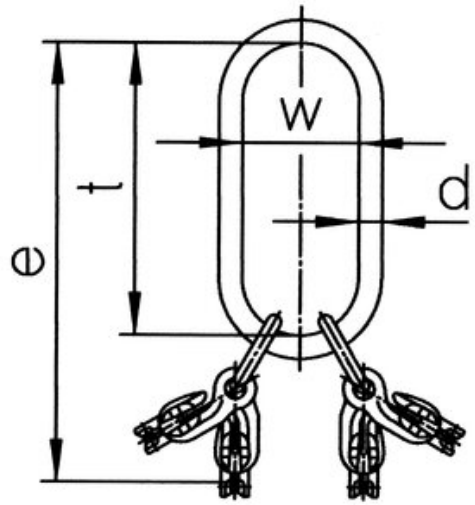
**Blueprint**