HFC S Flat Hydraulic Cylinder

Product information

Holmatro Flat cylinders (HFC) - Spring return

Unique specifications:

- Compact, flat version, efficient in case of limited insertion space
- Stroke of 15mm on all models

Standard supplied with:

- Standard provided with fixing holes for easy assembly
- Dirt scraper ring
    - Protects against pollution
    - Increases the life span
- Superior seal for an excellent static and dynamic sealing
- Splined plunger, no saddle needed
- High flow female coupler A118

Also available:

- Hydraulic pump units 700bar to control your system
- Hydraulic hoses 700bar
- System components to complete your hydraulic system

Material: Steel

Part Code	Code	WLL ton	Stroke mm	Closed height mm	Capacity kN/t	Weight kg
16.40100112291	HFC 5 S 1.5	5	15	44	50.9 / 5.2	1
16.40100112292	HFC 10 S 1.5	10	15	46	99.8 / 10.2	1.6
16.40100112293	HFC 20 S 1.5	20	15	55	203.6 / 20.8	2.9
16.40100112295	HFC 30 S 1.5	30	15	60	318.1 / 32.4	4.2
16.40100112296	HFC 50 S 1.5	50	15	71	510.4 / 52	7
16.40100112297	HFC 75 S 1.5	75	15	80	747.9 / 76.3	11
16.40100112298	HFC 100 S 1.5	100	15	90	1030.5 / 105.1	18.1
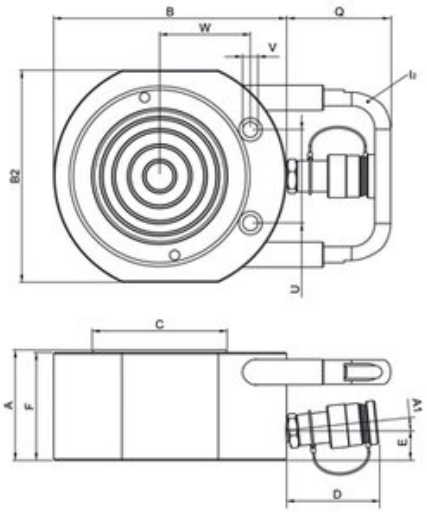
Blueprint