MENNENS | Lifting Solutions Group
Axel Johnson International

Stainless steel Swivel Davit Crane SD-SS 125-250-500

Product information



The lifting davit stainless steel 316 is a very user-friendly standing crane. Lightweight and portable. Within 3 seconds this winch is ready for use. Due to the use of 316 stainless steel, the Davit crane has a very high corrosion resistance.

- robust and safe lifting davit crane
- ready to use in 5 seconds
- integrated winch and cable in an ergonomic modern design
- easy to transport
- load pressure brake with double ratchet system for safe stable hold of the load in any position
- possible to rotate 360° due to the use of ball bearings
- adjustable crank
- including 13 meter stainless steel wire rope (d5 mm) with hook
- full stainless steel grade 316 body

Options:

- ATEX certified zone 2 and 22 (EX)

  CE II 3G Ex IIC T4 Gc, -20°C<T amb <+70°C
  CE II 3D Ex IIIC T135°C Dc, -20°C<T amb <+70°C

... *Read more*

Material: stainless steel AISI 316
Marking: According to standard
Temperature range: -20°C up to +40°C
Standard: EN 13157

Mennens Belgium
sales@mennensbelgium.be
+32 (0)3 253 23 23

© November 2026 - All Rights Reserved

MENNENS | Lifting Solutions Group
Axel Johnson International

Stainless steel Swivel Davit Crane SD-SS 125-250-500

Blueprint

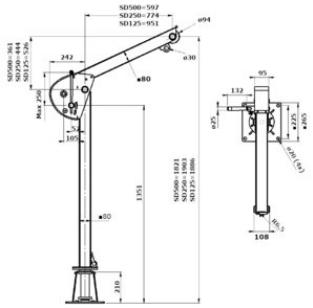

Technical data

Part code	Code	WLL ton	Rope capacity m	Capacity top layer kg	Max. Reach mm	Weight kg
601177001940	SD125SS	0.125	18	125	951 mm	30
601177001930	SD250SS	0.25	18	250	774 mm	30
601177001920	SD500SS	0.5	18	500	597 mm	30

Mennens Belgium
sales@mennensbelgium.be
+32 (0)3 253 23 23

© November 2026 - All Rights Reserved