Forklift Jib

Product information

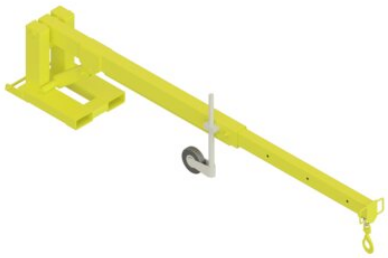

CERTEX

Coupling the forklift jib to a forklift truck creates a virtual crane hoist with a reach that is both longer and higher, and capable of moving goods that would otherwise require the use of a mobile crane. It also makes it possible to pass over obstacles such as fencing for example.
Design: Telescopic sliding arm for lifting in positions 6-10. The arm can be raised in 15-degree steps, up to 45 degrees. It is equipped with a support wheel that can be raised and is also demountable. Supplied complete with shackle and swivel safety hook, as shown in the table. The fork lift jib is locked behind the fork ends by means of a through locking pin.
Proof: Batch proof 1.5 x WLL

... *Read more*

Material: Hollow beam and plate of high-strength structural steel.
Marking: CE-mark, Maximum load
Finish: Yellow painted.
Warning: To be able to use the full capacity of the fork lift jib according to the chart above there needs to be a lifting capacity of at least 5 tonnes at 600mm on the forks. If a smaller truck is to be used the chart needs to be equivalently reduced. The recalculation and remarking of the loading sign can be made on request.

Mennens Belgium
sales@mennensbelgium.be
+32 (0)3 253 23 23

© November 2026 - All Rights Reserved

MENNENS | Lifting Solutions Group
Axel Johnson International

Forklift Jib

Blueprint

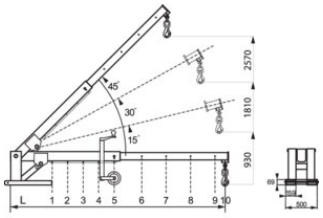

Technical data

Part code	Code	WLL ton	hook type	Fork dimension mm	Weight kg
622169139	6913	3	X-027-10	155x60 - 125x50	215

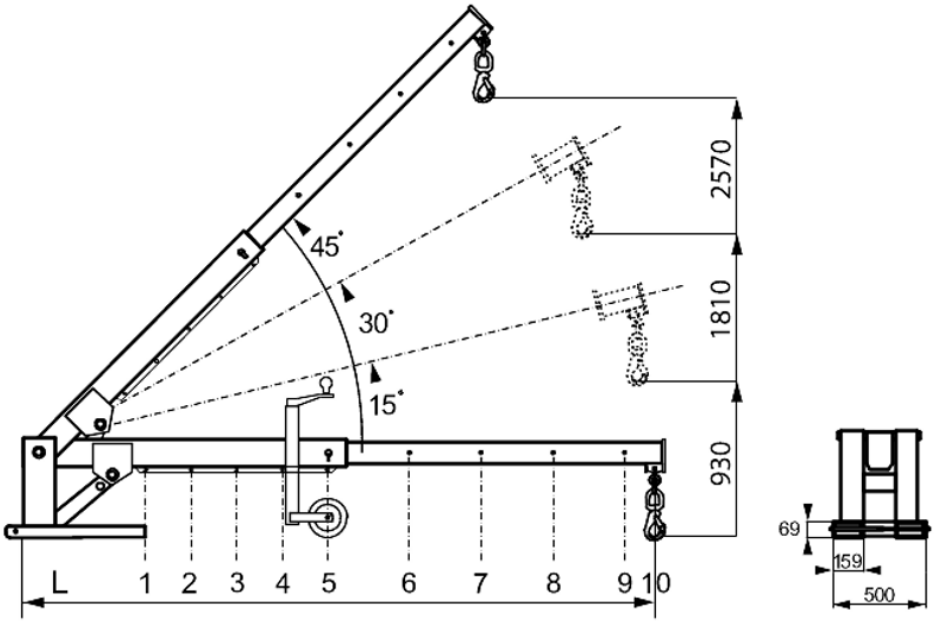

Table 1 Note that the table's max. load value is applicable to trucks with a max load of 5.4 ton 600m out on the forks.

Lift position	1	2	3	4	5	6	7	8	9	10
Distance to hook (L)	700	1000	1300	1600	1900	2100	2500	2900	3300	3700
Max load kg	3000	3000	2240	1760	1450	1100	910	775	675	600

Mennens Belgium
sales@mennensbelgium.be
+32 (0)3 253 23 23

© November 2026 - All Rights Reserved

Lifting Solutions Group
Axel Johnson International

Forklift Jib

Mennens Belgium
sales@mennensbelgium.be
+32 (0)3 253 23 23

© November 2026 - All Rights Reserved