MENNENS | Lifting Solutions Group
Axel Johnson International

Connecting Link C POWERTEX

Product information



The POWERTEX G10 Connecting Link C is a Grade 100 connecting link designed for quick and practical assembly of chain slings. It provides a connection between compatible chain sling components, while the locking spring is encapsulated in a protective steel bushing to protect the locking mechanism during industrial use.

Available for chain sizes from 6 mm to 32 mm with WLLs from 1.4 t to 40 t.

Best used for

- Connecting compatible components when assembling Grade 100 chain slings.

Product benefits

- Connecting link design enables quick and cost-effective chain sling assembly.
- Protective steel bushing shields the encapsulated locking spring.
- Grade 100 design offers 25% higher WLL than traditional Grade 80 components.
- Conforms to EN 1677 Parts 1, 2, 3 and 4 with a 25% higher WLL.
- Every forged component is crack detection tested. Production samples are proof-load tested, and the design is factory type tested.
- Fatigue tested to 20,000 cycles at 1.5 × WLL with batch traceability and a POWERTEX 2.2 certificate.
- The components may also be used with Grade 8 chain to EN 818-2. In such a case, the chain sling must be rated as Grade 8 in accordance with EN 818-4

... *Read more*

Marking: According to standard, POWERTEX + Model (C-6-10) + traceability code.
Temperature range: -40°C up to +200°C without reduction in WLL
Finish: Powder painted in red
Standard: EN 1677-1 (+ 25% WLL), AS 3776

Safety factor: 4:1
Grade: 10

Mennens Belgium
sales@mennensbelgium.be
+32 (0)3 253 23 23

© November 2026 - All Rights Reserved

MENNENS | Lifting Solutions Group
Axel Johnson International

Connecting Link C POWERTEX

Blueprint

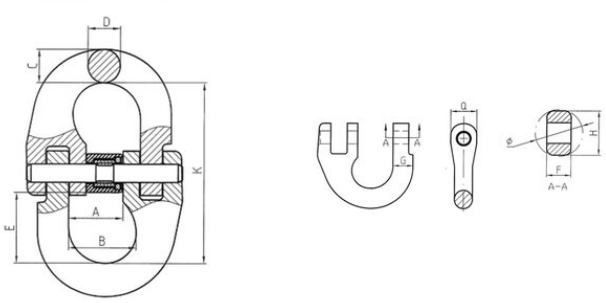

Technical data

Part code	Code	Chain diameter mm	WLL ton	EWL mm	A mm	B mm	C mm	D mm	E mm	F mm	G mm	H mm	K mm	Q mm	Ø mm mm	Weight kg
402200140310	C-6-10	6	1.4	44.5	14	16.9	8.5	7	16	5.5	7.4	11	44.5	12	11.4	0.08
402200250310	C-8-10	8	2.5	63	18.5	22.7	10.5	10	24	7.8	10.2	14	63	14	15	0.18
402200400310	C-10-10	10	4	71	23	27.7	12.6	12.6	28	9.6	12.6	18	71	18	19	0.34
402200670310	C-13-10	13	6.7	92.5	28	33.2	16.5	16.5	34	12.5	17	23	92.5	23	24.5	0.68
402201000310	C-16-10	16	10	106.5	33.5	39	20	20	39	16.2	20	29.5	106.5	29.5	31	1.22
402201600310	C-20-10	20	16	123	42	47.3	25	25	42	18	25	35.5	123	35.5	38	2.13
402201900310	C-22-10	22	19	137.5	48	55	27	27	50	21	27	39	137.5	39	41	3
402202650310	C-26-10	26	26.5	163	61	68	32	32	63	25	32	45	163	45	49	5.22
402204000310	C-32-10	32	40	197	80	87	40	40	78	33	38.5	54	197	54	61	9.55

Mennens Belgium
sales@mennensbelgium.be
+32 (0)3 253 23 23

© November 2026 - All Rights Reserved