MENNENS | Lifting Solutions Group
Axel Johnson International

VSIII hand chain hoist

Product information



General:
Capacity 250 - 5000 kg
The newly designed hand chain hoist VS!!! is an innovative further development introduced by Yale. The improved hand chain guide prevents canting or jamming of the hand chain, leading to a smooth running of the chain. High quality bearings on side plates, gearbox and load chain sheave ensure smooth operation of load chain and drive pinion.
Optimized hand forces set standards for easy operation.

Features:
· Strong bolts between side plates and housing cover and the reinforced hand wheel cover ensure increased stability.
· Precision machined guide rollers ensure smooth running of the load chain.
· High quality bearings for gearbox, side plates and load chain sheave permit a long service life.
· Zinc-plated and yellow-chromated brake parts and guide rollers ensure increased corrosion protection.
· Zinc-plated load chain as standard for added corrosion protection.

Options:
· Overload protection device
· Chain container

Important:
Yale hoists and trolleys are not designed for passenger elevation applications and must not be used for this purpose.

... *Read more*

Mennens Belgium
sales@mennensbelgium.be
+32 (0)3 253 23 23

© November 2026 - All Rights Reserved

MENNENS | Lifting Solutions Group
Axel Johnson International

VSIII hand chain hoist

Blueprint

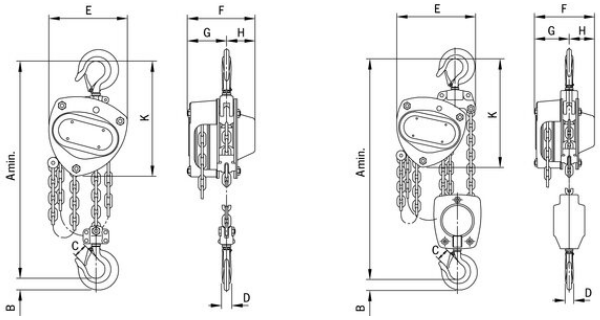

Technical data

Part code	WLL ton	Lifting height m	Number of falls	Model	Load chain mm	Handle pullat WLL daN	Lift per 1mhand chain overhaul mm	Weight kg
500500030100160	0.25	1	1	VSIII 0,25/1	4 x 12	20	50	3.9
500500050100160	0.5	1	1	VSIII 0,5/1	5 x 15	21	26	9
500500100100160	1	1	1	VSIII 1,0/1	6 x 18	24	24	11.5
500500150100160	1.5	1	1	VSIII 1,5/1	8 x 24	30	17	17.5
500500200100164	2	1	2	VSIII 2,0/2	6 x 18	29	15	17.3
500500200100160	2	1	1	VSIII 2,0/1	8 x 24	32	19	19
500500300100164	3	1	2	VSIII 3,0/2	8 x 24	37	10	27
500500300100160	3	1	1	VSIII 3,0/1	10 x 30	40	12	31
500500500100160	5	1	2	VSIII 5,0/2	10 x 30	41	8	43

Mennens Belgium
sales@mennensbelgium.be
+32 (0)3 253 23 23

© November 2026 - All Rights Reserved