MENNENS | Lifting Solutions Group
Axel Johnson International

Eye Bolts DIN580 C15

Product information



Eye bolts, generally to DIN 580.

Certification on request: 2.1, 2.2

... *Read more*

Material: carbon steel, C15
Marking: CE-mark
Finish: electro-galvanized

Safety factor: 6:1

Mennens Belgium
sales@mennensbelgium.be
+32 (0)3 253 23 23

© November 2026 - All Rights Reserved

Eye Bolts DIN580 C15

Blueprint

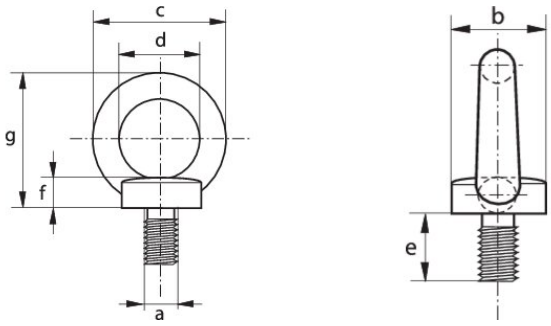

Mennens Belgium
sales@mennensbelgium.be
+32 (0)3 253 23 23

© November 2026 - All Rights Reserved

MENNENS | Lifting Solutions Group
Axel Johnson International

Eye Bolts DIN580 C15

Technical data

Part code	WLL ton	Thread mm	a mm	b mm	c mm	d mm	e mm	f mm	g mm	Weight kg
421100010352	0.07	M6x1.00	M6x1.00	20	36	20	13	6	36	0.051
421100140350	0.14	M8x1.25	M8x1.25	20	36	20	13	6	36	0.055
421100230350	0.23	M10x1.5	M10x1.5	25	45	25	17	8	45	0.103
421100340350	0.34	M12x1.75	M12x1.75	30	54	30	20.5	10	53	0.169
421100490350	0.49	M14x2.00	M14x2.00	35	63	35	27	12	60	0.299
421100070350	0.7	M16x2.00	M16x2.00	35	63	35	27	12	62	0.307
421100090350	0.9	M18x2.50	M18x2.50	40	72	40	30	14	71	0.428
421100120350	1.2	M20x2.5	M20x2.5	40	72	40	30	14	71	0.424
421100150350	1.5	M22x2.5	M22x2.5	45	81	45	35	14	80	0.628
421100180350	1.8	M24x3.00	M24x3.00	50	90	50	36	18	90	0.908
421100250350	2.5	M27x3.00	M27x3.00	50	90	50	36	18	90	0.883
421100320350	3.2	M30x3.50	M30x3.50	65	108	60	45	22	109	1.59
421100430350	4.3	M33x3.50	M33x3.50	65	108	60	45	22	110	1.67
421100460350	4.6	M36x4.00	M36x4.00	75	126	70	54	26	128	2.35
421100610350	6.1	M39x4.00	M39x4.00	75	126	70	54	26	130	2.66
421100630350	6.3	M42x4.50	M42x4.50	85	144	80	63	30	147	4.03
421100800350	8	M45x4.50	M45x4.50	85	144	80	63	35	150	5.21
421100860350	8.6	M48x5.00	M48x5.00	100	166	90	68	35	168	6.32
421101150350	11.5	M56x5.50	M56x5.50	110	184	100	78	38	187	8.79
421101600350	16	M64x6.00	M64x6.00	120	206	110	90	42	208	12.4
421102100350	21	M72x6.00	M72x6.00	150	260	140	100	50	260	22.93
421102800350	28	M80x6.00	M80x6.00	170	296	160	112	55	298	32
421104000350	40	M100x6.00	M100x6.00	190	330	180	130	60	330	48

Mennens Belgium
sales@mennensbelgium.be
+32 (0)3 253 23 23

© November 2026 - All Rights Reserved