Solid Thimble S-6134

Product information

Solid thimble for mounting on steel wire ropes.
Certification: A works certificate can be supplied upon request.

Material: Cast mild steel, (GTW 40).
Marking: According to standard
Finish: Self coloured.
Standard: DIN 3091

Part Code	Rope Ø range mm	A mm	B mm	C mm	D mm	E Standard	E max mm	F mm	Weight kg/100pc
10.27KSD91080	8	9	15	40	66	14	20	-	1.3
10.27KSD91100	10	11	17.5	50	82	18	25	-	1.7
10.27KSD91120	12	13	20	60	98	21	30	-	2
10.27KSD91140	14	16	23.5	70	114	25	35	-	2.5
10.27KSD91160	16	18	26	80	130	28	40	16	3.2
10.27KSD91180	18	20	28.5	90	145	31	45	18	4.6
10.27KSD91200	20	22	31	100	161	35	50	20	6.6
10.27KSD91220	22	24	33.5	110	177	38	55	22	9
10.27KSD91240	24	26	36	120	193	41	60	24	14
10.27KSD91260	26	29	39.5	130	209	44	65	26	21
10.27KSD91280	28	31	42	140	224	47	70	28	39
10.27KSD91320	32	35	47	160	256	53	80	32	73
10.27KSD91360	36	40	53	180	288	59	90	36	83
10.27KSD91400	40	44	58	200	320	65	100	40	113
10.27KSD91440	44	48	63	220	352	70	110	44	148
10.27KSD91480	48	53	69	240	384	76	120	48	193
10.27KSD91520	52	57	74	260	416	81	130	52	254
10.27KSD91560	56	62	80	280	448	86	140	56	355
10.27KSD91640	64	70	90	320	512	95	160	64	387
10.27KSD91720	72	79	101	360	576	104	180	72	437
10.27KSD91800	80	88	112	400	640	112	200	80	870
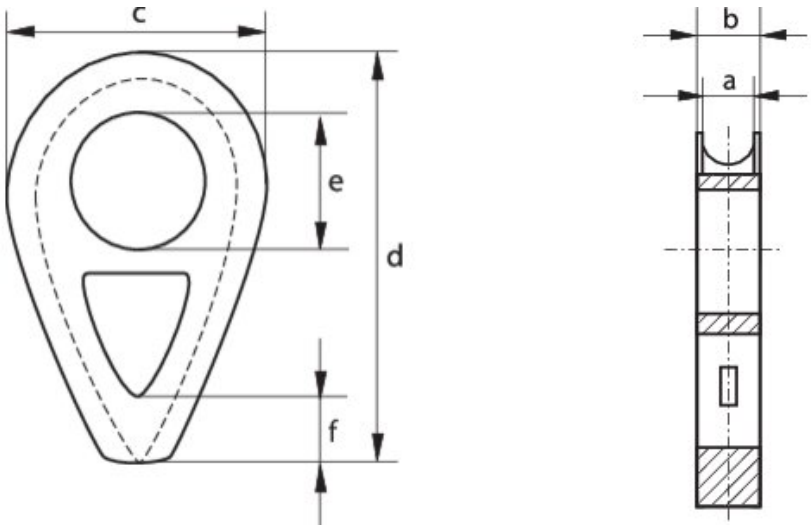
Blueprint